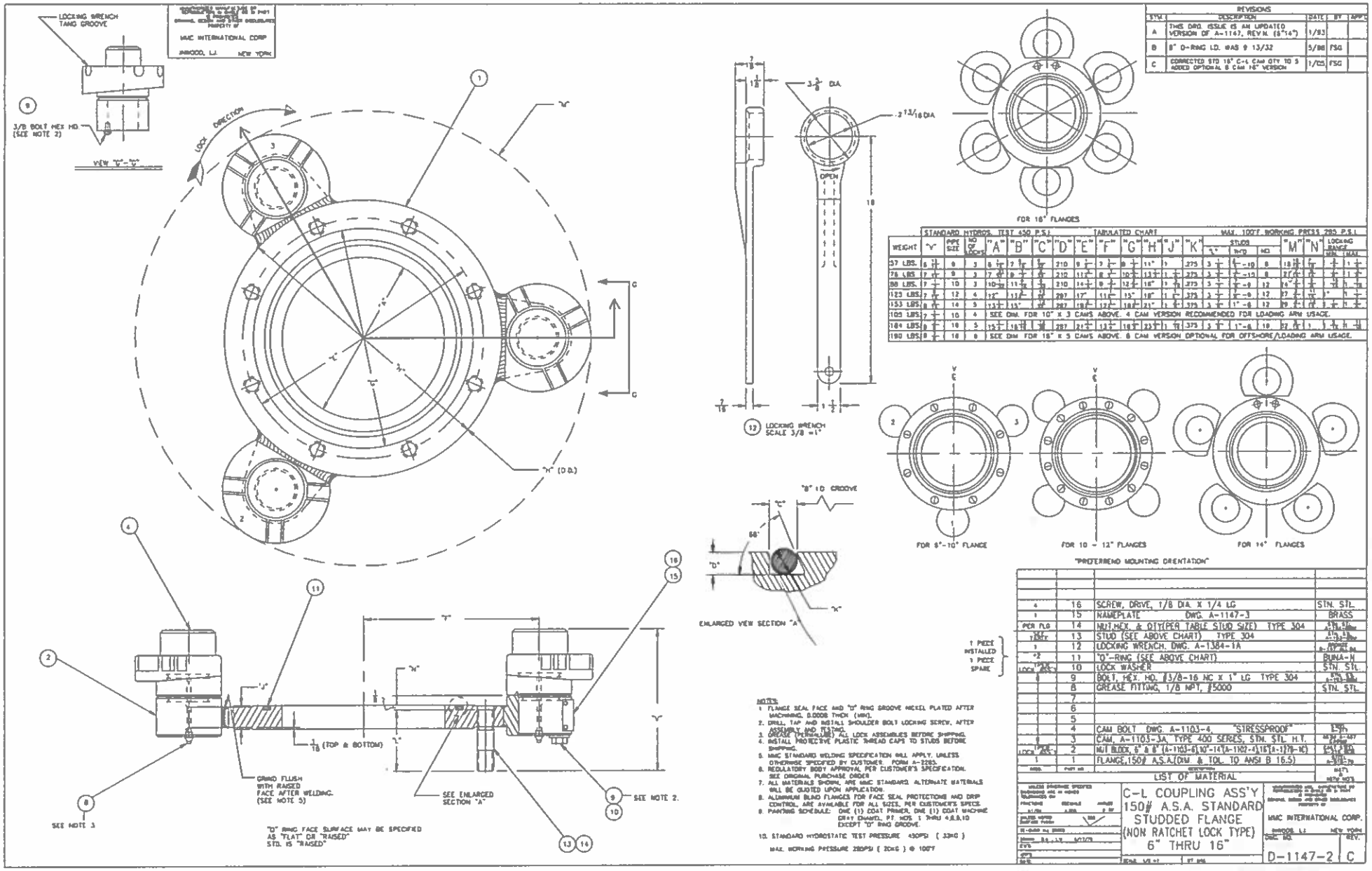

REVISIONS				
SYM	DESCRIPTION	DATE	BY	APP'D
A	THIS DRG. ISSUE IS AN UPDATED VERSION OF A-1147, REV.N. (8"-16")	1/83		
B	8" O-RING I.D. #AS 9 13/32	5/88	FSG	
C	CORRECTED STD 18" C-L CAM QTY TO 3 ADDED OPTIONAL 8 CAM 16" VERSION	1/05	FSG	

STANDARD HYDROS. TEST 450 P.S.I. TABULATED CHART MAX. 100°F WORKING PRESS. 285 P.S.I.																						
WEIGHT	"V"	PIPE SIZE	NO. OF LOCKS	"A"	"B"	"C"	"D"	"E"	"F"	"G"	"H"	"J"	"K"	STUDS "X"	STUDS THRD	STUDS NO.	"M"	"N"	LOCKING RANGE MIN.	LOCKING RANGE MAX.
37 LBS.	6 11/16	6	3	6 1/2	7 5/16	5/8	210	9 1/2	7 1/2	9 1/2	11"	1	.275	3 1/4	1/4-10	8	13 3/16	5/8	1/4	1 1/4
76 LBS.	7 1/2	8	3	7 1/2	8 1/2	7/8	210	11 1/2	8 1/2	10 1/2	13 1/2	1 1/4	.275	3 1/4	1/4-10	8	21 1/16	7/8	1/4	1 1/4
88 LBS.	7 1/2	10	3	10 1/16	11 1/8	7/8	210	14 1/2	9 1/2	12 1/2	16"	1 3/4	.275	3 1/4	1/4-10	12	26 1/2	7/8	1/4	1 1/4
123 LBS.	7 1/2	12	4	12"	13 1/2	7/8	297	17"	11 1/2	15"	18"	1 1/4	.275	3 1/4	1/4-10	12	27 1/2	7/8	1/4	1 1/4
153 LBS.	8 1/2	14	3	13 1/2	15"	7/8	297	19 1/2	12 1/2	18 1/2	21"	1 1/4	.375	3 1/4	1/4"-10	12	30 1/2	7/8	1/4	1 1/4
105 LBS.	7 1/2	10	4	SEE DIM. FOR 10" X 3 CAMS ABOVE. 4 CAM VERSION RECOMMENDED FOR LOADING ARM USAGE.																
184 LBS.	8 1/2	16	3	15 1/2	18 11/16	7/8	297	21 1/2	13 1/2	18 1/2	23 1/2	1 1/4	.375	3 1/4	1/4"-10	16	32 1/2	1	1 1/4	1 1/4
190 LBS.	8 1/2	16	8	SEE DIM. FOR 16" X 3 CAMS ABOVE. 8 CAM VERSION OPTIONAL FOR OFFSHORE/LOADING ARM USAGE.																

QTY	PART NO.	DESCRIPTION	MATL
4	16	SCREW, DRIVE, 1/8 DIA. X 1/4 LG	STN. STL.
1	15	NAMEPLATE DWG. A-1147-3	BRASS
PER PLG	14	NUT,HEX. & QTY(PER TABLE STUD SIZE) TYPE 304	STN. STL.
TABLE	13	STUD (SEE ABOVE CHART) TYPE 304	STN. STL.
1	12	LOCKING WRENCH, DWG. A-1384-1A	A-1384-1A
*2	11	"O"-RING (SEE ABOVE CHART)	BUNA-N
TABLE LOCK WASHER	10	LOCK WASHER	STN. STL.
8	9	BOLT, HEX. HD. #3/8-16 NC X 1" LG TYPE 304	STN. STL. A-193-B8
1	8	GREASE FITTING, 1/8 NPT, #5000	STN. STL.
	7		
	6		
	5		
4	4	CAM BOLT DWG. A-1103-4, "STRESSPROOF"	A-193-B7
4	3	CAM, A-1103-3A TYPE 400 SERIES, STN. STL. H.T.	AISI 410 H.T.
TABLE LOCK NUT	2	NUT BLOCK, 6" & 8" (A-1103-6) 10"-14"(A-1102-4) 16"(A-1278-NC)	A-194 GR. 2H
1	1	FLANGE,150# A.S.A.(DIM & TOL. TO ANSI B 16.5)	A-105
MDL	PART NO.	LIST OF MATERIAL	MATL.

UNLESS OTHERWISE SPECIFIED DIMENSIONS ARE IN INCHES TOLERANCES ON: FRACTIONS ±1/16 DECIMALS ±.005 ANGLES ±2 DEG. SURFACE FINISH 125 RMS. R-0.010 ALL BREAKS. DRAWN S.S. 1-13 6/13/79 CHK'D APP'D DATE

C-L COUPLING ASS'Y 150# A.S.A. STANDARD STUDDED FLANGE (NON RATCHET LOCK TYPE) 6" THRU 16"

MMC INTERNATIONAL CORP.
BROOD, L.I. NEW YORK

DWG. NO. D-1147-2 REV. C

SCALE 1/2=1 FT. PER

NOTES:
1. FLANGE SEAL FACE AND "O" RING GROOVE NICKEL PLATED AFTER MACHINING. 0.0008 THICK (MIN).
2. DRILL, TAP AND INSTALL SHOULDER BOLT LOCKING SCREW, AFTER ASSEMBLY AND TESTING.
3. GREASE (PERMALUBE) ALL LOCK ASSEMBLIES BEFORE SHIPPING.
4. INSTALL PROTECTIVE PLASTIC THREAD CAPS TO STUDS BEFORE SHIPPING.
5. MMC STANDARD WELDING SPECIFICATION WILL APPLY, UNLESS OTHERWISE SPECIFIED BY CUSTOMER. FORM A-2265.
6. REGULATORY BODY APPROVAL PER CUSTOMER'S SPECIFICATION. SEE ORIGINAL PURCHASE ORDER
7. ALL MATERIALS SHOWN, ARE MMC STANDARD. ALTERNATE MATERIALS WILL BE QUOTED UPON APPLICATION.
8. ALUMINUM BLIND FLANGES FOR FACE SEAL PROTECTION AND DRIP CONTROL, ARE AVAILABLE FOR ALL SIZES, PER CUSTOMER'S SPECS.
9. PAINTING SCHEDULE: ONE (1) COAT PRIMER, ONE (1) COAT MACHINE DRY (MARC). PT. NOS. 1 THRU 4,8,9,10 EXCEPT "O" RING GROOVE.
10. STANDARD HYDROSTATIC TEST PRESSURE 450PSI (32KG)

MAX. WORKING PRESSURE 285PSI (20KG) @ 100°F